BOILER MANUFACTURER
BOILER MODEL NO.
BOILER OUTPUT
BOILER APPLICATION

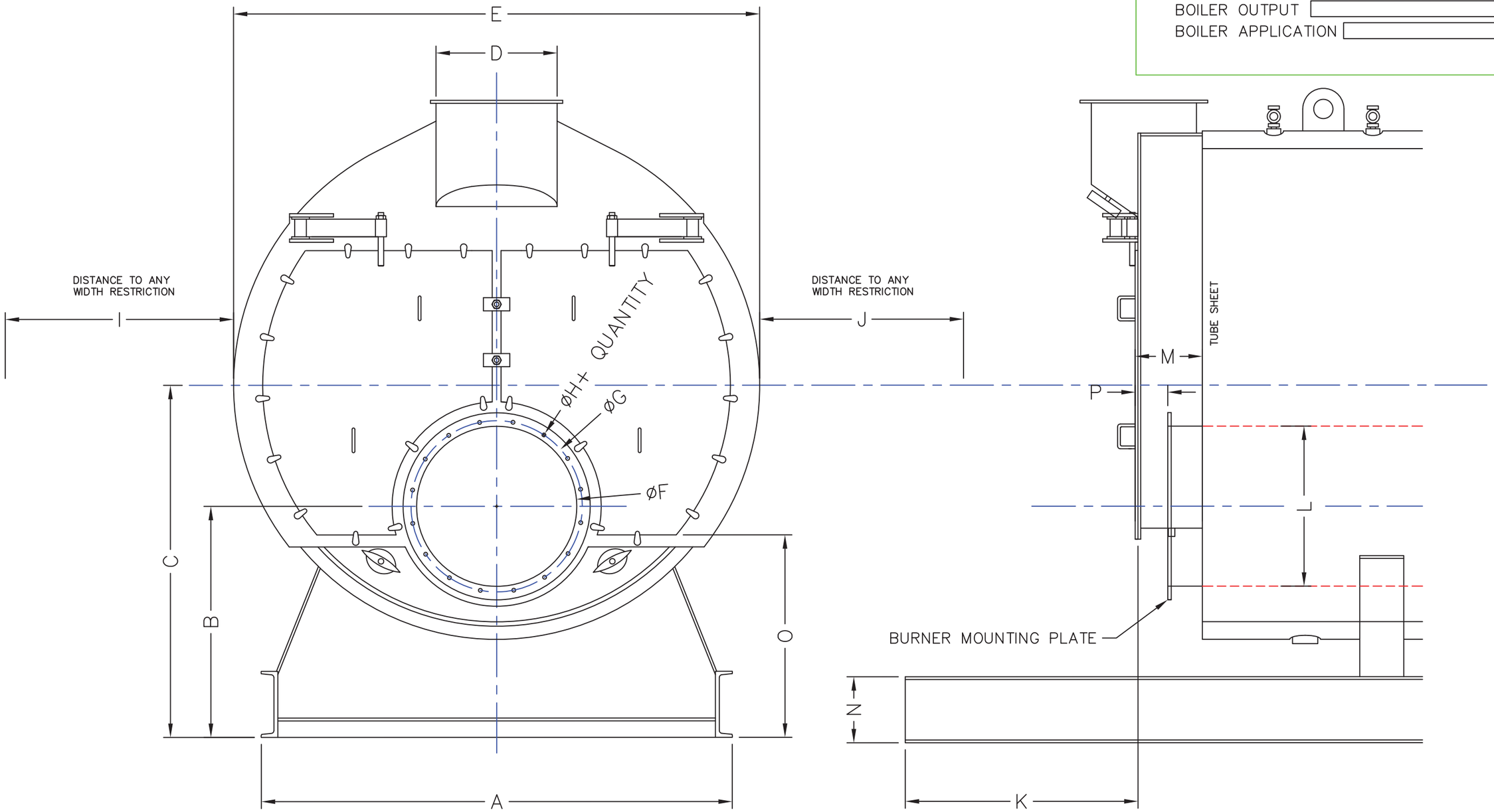

A = WIDTH OF BOILER BASE		F = I.D. MOUNTING PLATE		K = PLINTH EXTENSION		P = FRONT OF BOILER TO MOUNTING RING	
B = CENTER LINE OF BURNER		G = P.C.D. OF BURNER FIXINGS		L = FURNACE DIAMETER		Q = AIR LEFT OR RIGHT	
C = CENTER LINE OF BOILER		H = øBOLTS + QUANTITY		M = BOILER FRONT TO TUBE PLATE		R = GAS ENTERY LEFT OR RIGHT	
D = ø OF THE STACK		I = DISTANCE TO RESTRICTION		N = PLINTH HEIGHT		S = FURNACE LENGTH	
E = WIDTH OF THE BOILER		J = DISTANCE TO RESTRICTION		O = FLOOR TO BOILER DOOR		T = FURNACE PRESSURE	

ISSUE	DATE	AUTH.	AMD.No
1	14:08:06	N.P.G.	

SPECIAL NOTES:

THIRD ANGLE

IF IN DOUBT ASK

DRAWING TITLE

LIMPSFIELD COMBUSTION
ENGINEERING LIMITED
UNIT 10 AIRPORT INDUSTRIAL ESTATE, WIRELESS WAY,
BIGGIN HILL, KENT, TN16 3BW
TEL: 01959 576 633 / FAX 01959 576 644
WEB SITE: www.limpsfield.co.uk

CLIENT/SITE –

RECORD DRAWING

SCALE – N.T.S.	DATE – 14:08:06	JOB NO.–
DRAWN – N.P.G.	CHECKED –	DRAWING NO.– GADRAWING